Fluid-o-Tech
POWER THE FLOW

Stainless steel rotary vane pumps PO 70-400 series

Find out more

The rotary vane pumps, manufactured by Fluid-o-Tech and sold worldwide under the trademark Rotoflow, are volumetric pumps designed for pumping water and aggressive liquids with low flow at high pressure.

Technical features and manufacturing characteristics

The housing and the rotor are in stainless steel AISI 303, while the pumping chamber and the vanes are in graphitic carbon.
Inlet and outlet ports are 3/8" GAS or NPT threaded.
A built-in adjustable relief valve to protect the pump and the system from unexpected pressure spikes is also available upon request.
The pump can be connected to direct coupling motors with a stainless steel clamp or to M71 and M80 UNELMEC or NEMA 56C frame motors with the Fluid-o-Tech coupling and adapter set. Maximum operative temperature: 70 °C (158 F).

Available upon request:
- Viton®/EPDM seals
- Built-in relief valve
- Flange mount

MAIN APPLICATIONS

- Soda circulation
- Cooling systems
- Booster systems
- Water treatment

TECHNICAL INFORMATION

Pump housing material	Stainless steel	Max static pressure	20 bar/290 psi
Pumping chamber	Graphite	Pump weight	Clamp mount 1.2 kg (2.7 lb)
Ports	3/8" GAS or NPT		Flange mount 1.5 kg (3.3 lb)
Speed limit	1.725 rpm		

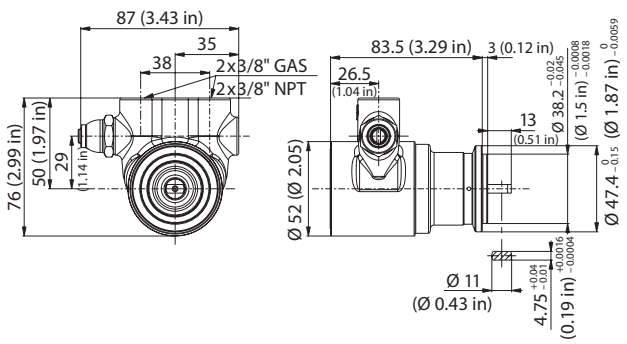

Dimensions in mm/inches

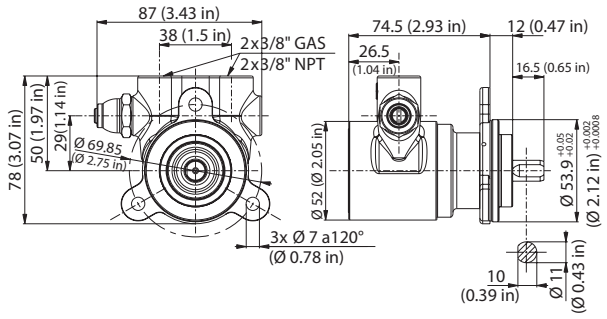

Dimensions in mm/inches

Model PO/PA/PW	0710	0711	0711F	110	111	111F	1510	01511	1511F	210	211	211F
Figure		A-A			B-B			C-C			D-D	
Mount	Clamp	Clamp	Flange	Clamp	Clamp	Flange	Clamp	Clamp	Flange	Clamp	Clamp	Flange
Relief valve	NO	YES	YES	NO	YES	YES	NO	YES	YES	NO	YES	YES

Model PO/PA/PW	2510	2511	2511F	310	311	311F	3510	3511	3511F	410	411	411F
Figure		E-E			F-F			G-G			H-H	
Mount	Clamp	Clamp	Flange	Clamp	Clamp	Flange	Clamp	Clamp	Flange	Clamp	Clamp	Flange
Relief valve	NO	YES	YES	NO	YES	YES	NO	YES	YES	NO	YES	YES

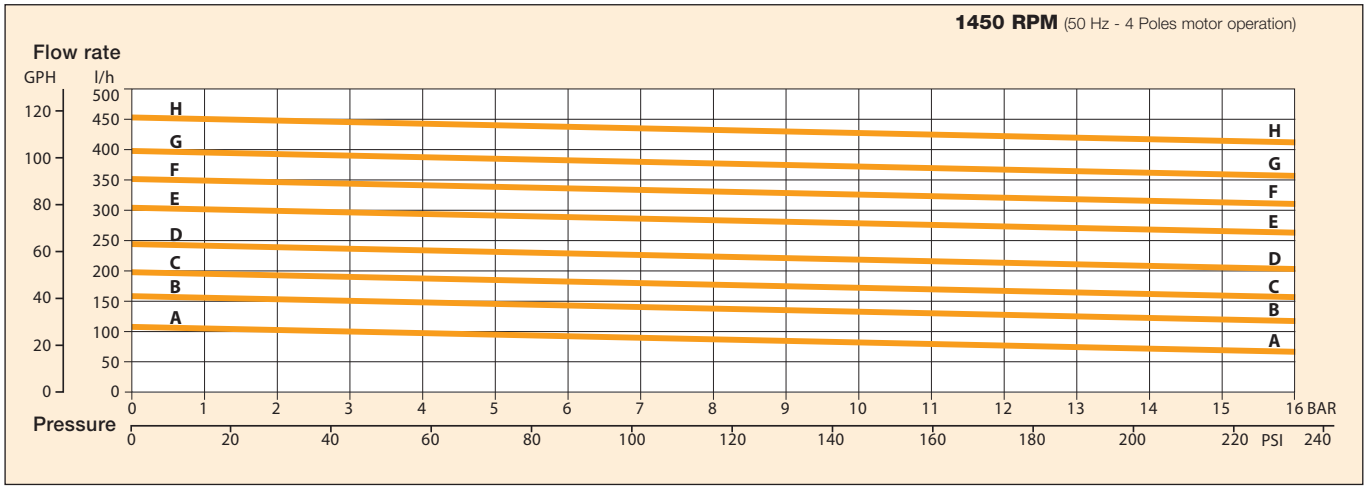

Model PO/PA/PW	0710	0711	0711F	110	111	111F	1510	01511	1511F	210	211	211F
Figure		A'-A'			B'-B'			C'-C'			D'-D'	
Mount	Clamp	Clamp	Flange	Clamp	Clamp	Flange	Clamp	Clamp	Flange	Clamp	Clamp	Flange
Relief valve	NO	YES	YES	NO	YES	YES	NO	YES	YES	NO	YES	YES

Model PO/PA/PW	2510	2511	2511F	310	311	311F	3510	3511	3511F	410	411	411F
Figure		E'-E'			F'-F'			G'-G'			H'-H'	
Mount	Clamp	Clamp	Flange	Clamp	Clamp	Flange	Clamp	Clamp	Flange	Clamp	Clamp	Flange
Relief valve	NO	YES	YES	NO	YES	YES	NO	YES	YES	NO	YES	YES

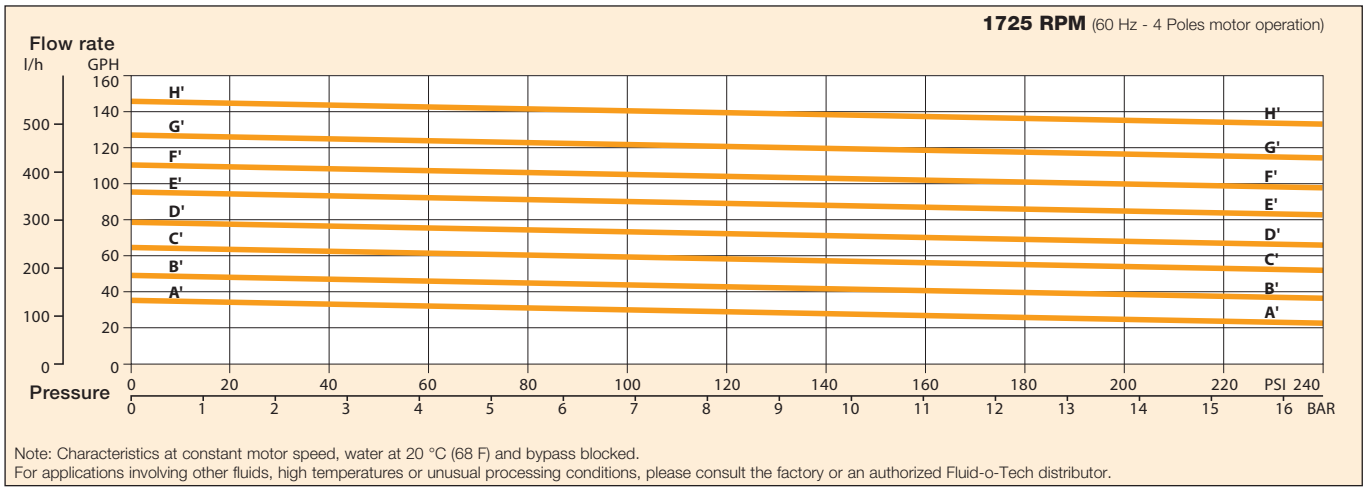

Note: Characteristics at constant motor speed, water at 20 °C (68 F) and bypass blocked.
For applications involving other fluids, high temperatures or unusual processing conditions, please consult the factory or an authorized Fluid-o-Tech distributor.

Fluid-o-Tech reserves the right to alter the specifications indicated in this catalogue at any time and without prior notice.

Fluid-o-Tech srl
Via Leonardo da Vinci, 40
20094 Corsico, Milano, Italy
Tel. +39 02 8917071
Fax +39 02 89170799
info@fluidotech.it

Fluid-o-Tech Int'l Inc.
161 Atwater St.,
06479 Plantsville CT (USA)
Tel. +1 (860) 276-9270
Fax +1 (860) 620-0193
info@fluid-o-tech.com

Fluid-o-Tech Int'l Inc. Japan
203, 2-17-19, Ebara, Shinagawa
Tokyo 142-0063, Japan
Tel. +81 (0) (3) 3783-9660
Fax +81 (0) (3) 3783-9661
k.kato@fluidotech.com

Fluid-o-Tech Asia (Beijing) Co., Ltd
Jingwei Industrial Zone,
Beifang Huairou, Beijing, 101400, PRC
Tel. +86 (0) (10) 61684650
Fax +86 (0) (10) 61684651
info@fluidotech-asia.com